International Academic Institute for Science and Technology

International Academic Journal of Science and Engineering
Vol. 7, No. 2, 2020, pp. 6-11.

ISSN 2454-3896

International Academic Journal of Science and Engineering

www.iaiest.com

Design and Implementation of a Control System for Electric Vehicles Using Model Predictive Control

Ramesh Patel [a], Manju Shah [b]

[a] *Ramesh Patel, Department of Mechanical Engineering, Steel City Engineering Institute, Jamshedpur, India.*
[b] *Manju Shah, Department of Mechanical Engineering, Steel City Engineering Institute, Jamshedpur, India.*

Abstract

The demand for electric energy from renewable sources is on the rise. Among various renewable energy sources, wind power stands out as a leader in success. This success can be attributed to decreasing power unit costs, advancements in energy conversion technologies, government incentives for green energy, environmental advantages, and the availability of wind both onshore and offshore. At least one power converter is required in order to connect a variable speed wind turbine-driven generator to the electrical grid. The T-type neutral-point clamped converter has gained popularity recently in low-voltage applications due to its advantages over traditional two-level voltage source inverters and three-level diode-clamped converters. The finite-control-set model predictive control technique is gaining popularity in power converter control applications, such as wind energy conversion systems, because of its benefits, which include eliminating the need for a modulating stage and being easy to implement. To solve the common mode voltage (CMV) problem for a 3L T-type NPC converter, we suggest a reduced control set (RCS) model predictive control technique.

Keywords: Common Mode Voltage. Electric Vehicle.

Received: 08 September 2020/Revised: 20 October 2020/Accepted: 03 November 2020/Published: 31 December 2020

Introduction

Fuel shortages and environmental pollution are caused by the growing number of vehicles on the road. Many studies on fuel-less vehicles have been conducted in light of this situation. As a result, electric vehicles (EVs) use battery power to generate renewable energy in place of fuel-powered vehicles. evaluations of various technologies [1]. Some EV systems are integrated with fuel cells or other power sources, while others rely only on battery power in their fundamental design. Due to their load power and battery capacity with the driving components, fully battery-powered vehicles operate at a limited speed. This helps to keep the motor running in an electric vehicle. The EV system has been integrated with additional power sources, such as fuel cells, to boost the motor's power and performance. This allows the EV to drive at high speeds and can handle heavy loads, just like a conventional fuel-powered vehicle. Along with the driving circuits, a BLDC motor has been utilized as the vehicle engine for the EV system's high power response [2].

Furthermore, in order to evaluate the effects of parameter mismatches on the performance of the suggested MPC schemes, we will incorporate a parameter sensitivity analysis into each of these goals [3]. These are this dissertation's main objectives. Interest in new and renewable energy sources has grown as a result of advancements in cost-effective and efficient energy conversion technology as well as supportive government regulations meant to lower greenhouse gas emissions from fossil fuel power plants. In 2018, the renewable energy industry saw encouraging expansion. Renewable energy sources must yet be adopted by other industries, such as transportation, heating, and cooling, which together account for a substantial 80% of energy use. Numerous generator layouts, power converter topologies, and control methods are currently being used commercially in wind turbines thanks to continuous advancements in power electronics and control technology. [4].

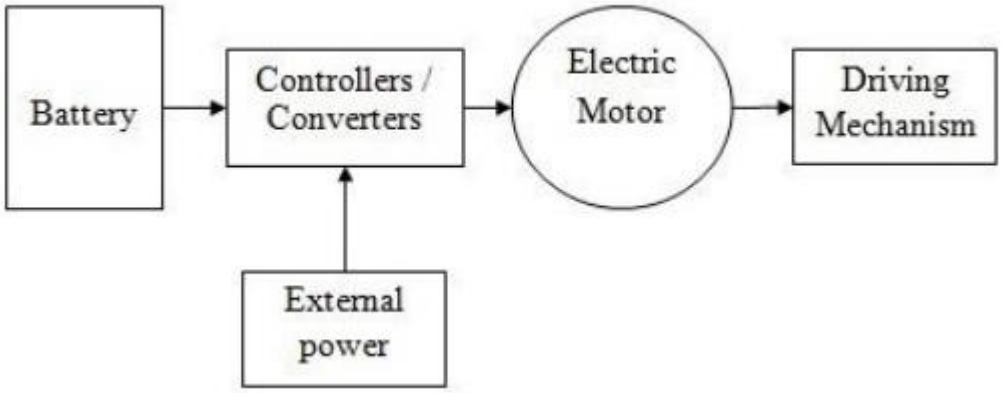

Fig. 1: Block diagram of EV system

Review of Literature

The traveler vehicle category is predicted to have seen the fastest growth in the Indian electric vehicle segment market over the past few decades. This is because of the continued efforts by the Indian government and clean energy vehicle manufacturers, which have led to the growth of such vehicles in the fleet of shared portability firms. In the Indian market for bike parts for electric vehicles, the Original Equipment Manufacturer (OEM) segment made a larger offer in 2019. This is because OEMs make bike segments more appealing because, at the moment, the purchase rate of these vehicles is larger than the part substitution rate. The e-rickshaw category drove the Indian market for electric vehicle parts for three-wheelers during the period under study (2014–2019). Due to the large number of these vehicles in major cities, e-rickshaws are not only easier to operate than pedal-based rickshaws but also more useful than auto-rickshaws, which is why their numbers on the road are rapidly increasing.

Due to the high levels of pollution in the city, which have caused a steady increase in the number of electric trucks and vehicles in the city over the past few years, Delhi has emerged as the largest market for both domestic and commercial electric vehicles in India. Due to differences in socioeconomic conditions, administrative setups, and levels of urbanization, several states dominate the Indian electric car market. For instance, Uttar Pradesh has been the largest supplier of EV parts, mostly due to the huge number of two- and three-wheel electric vehicles on the road. Similarly, Maharashtra has the most number of electric traveler vehicles in use, but Delhi has the largest fleet of electric business vehicles. However, because part manufacturers are using these concerted efforts to establish their

core business, associations have come to define the competition in the Indian EV segment market. For instance, Panasonic Corporation and Toyota established a joint venture in January 2019 by owning 51% of the shares. The joint venture provided lithium-ion batteries for Toyota's EVs, and Panasonic intends to increase its influence in the region's EV market.

Materials and Methods

This paper proposes the best regenerative braking system based on current controlling technique for EV systems using PV renewable energy. The best controlling method has been used to manage the BLDC motor's power in an EV system, and it successfully regulates the vehicle's speed with improved step reaction. Braking in the conventional braking system is dependent on mechanical power, which decreases the motor's speed to reach the desired speed range by applying force or load to the motor. In other cutting-edge techniques, the super capacitor and battery are integrated into the regenerative braking system to increase input power while starting the motor under conditions of high load. These kinds of braking systems can assist the engine in operating in sloped terrain and under various loading scenarios. However, the current braking system is unable to regulate the motor's speed using an efficient braking system model. The internal combustion engine of the series hybrid electric car is set up to power the three-phase alternator rather than the vehicle's drive line directly. The drive motors receive the rectified DC voltage from the three-phase alternator and three-phase rectifier. The wheels are powered by an electric motor that is directly attached to the drive line. The alternator's capacity can be selected to power both an electric motor and a battery bank at the same time. Both the alternator and the battery banks are set up to supply the power that the drive motors require when they consume a significant quantity of power. Figure 2 displays the series hybrid electric vehicle's configuration.

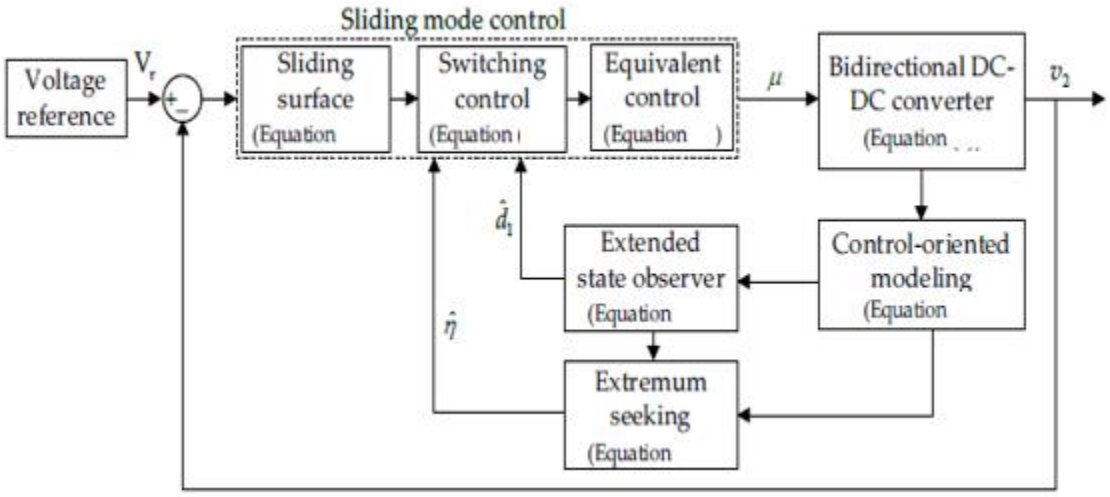

Fig. 1: Control Schemes

By connecting the electric motor directly to the drive line, the complexity is decreased and the mechanical gear wheels that are necessary for speed control are removed. The drive motor's speed can be managed using a straightforward control loop. Some automobiles have independent electric motors built right into each of the four wheels. When an electric motor is integrated into an EV's wheels, the vehicle's mass and weight increase but its fuel efficiency and economy decrease. However, using a separate motor removes the necessity for gear wheels, transmission shafts, and differentials, which are mechanical components of transmissions. For military arm vehicles, the distinct motor drives are primarily designed to provide high power and high torque.

Results and Discussion

The findings of the proposed DC-DC converter have been verified in this section, and the performance of the suggested design has been examined by contrasting it with the outcomes of the current DC-DC converter system. The suggested work has been evaluated using hardware components of the same design and circuit parameters, as well as implemented in a simulation block-based design. The ensuing subsections contain the comprehensive explanation.

DC-DC boosting converters are commonly employed in power inverter systems, which control and increase low input power from batteries. The converter enhances the low input voltage to high voltage gain in the renewable energy-based power system by choosing the right filtering components and arranging the diode structure and gated switches.

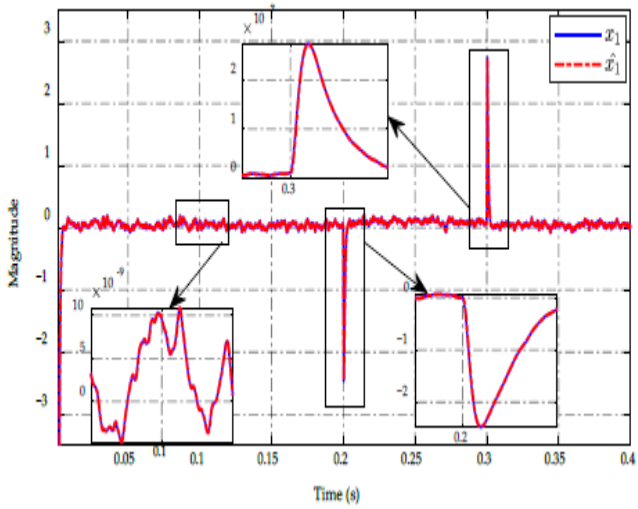

(a)

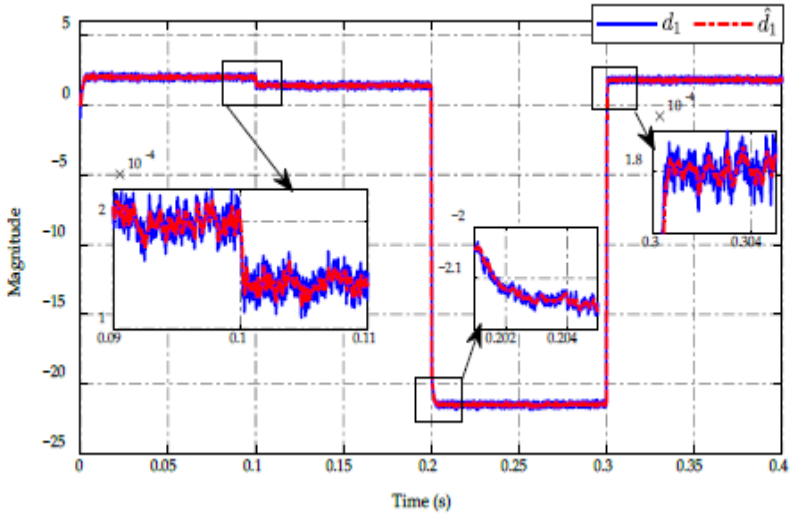

(b)

Fig. 2: Performance Evaluation: (a) State Estimation and (b) Mismatched Disturbance Estimation.

Different variations of converter designs are distinguished by the architecture of the switches and filtering components as well as their connectivity. A specific circuit is needed to control its time allocation, and additional components in the converter may make it more difficult for the switches to synchronize. Furthermore, the limited range of component availability may result in an increase in the noise and harmonics of the DC output.

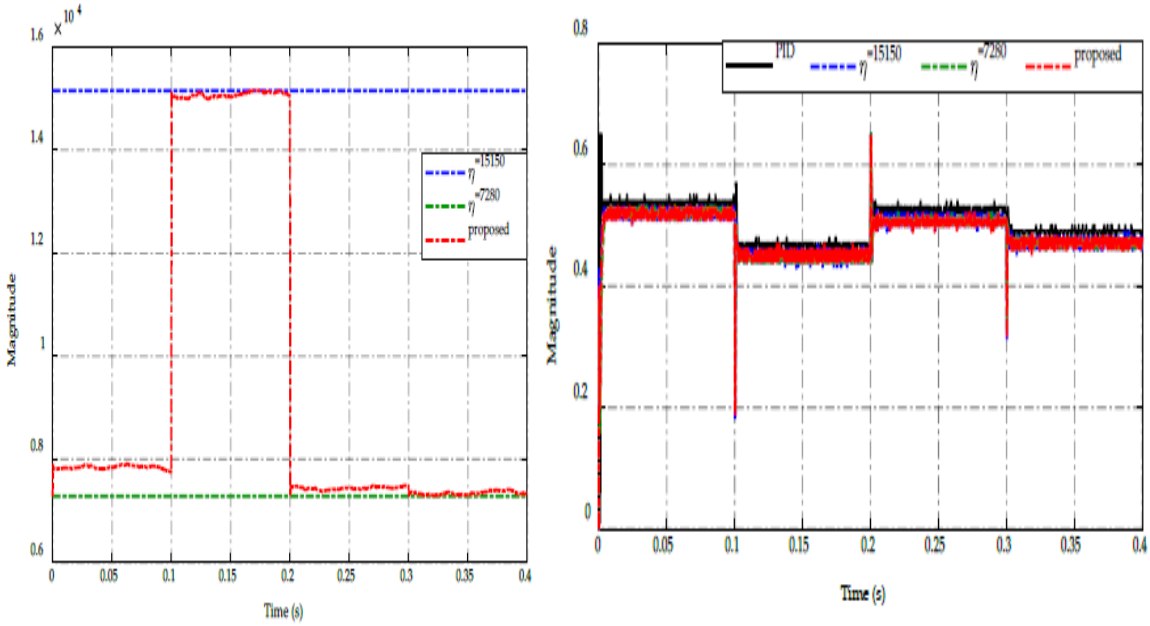

Fig. 3: Comparative Analysis of (a) Switching Gain Adaptation and (b) Duty Cycle Command.

The suggested DC-DC converter design incorporates the hybrid model of converter architecture to enhance its performance and get beyond those kinds of problems. In order to increase the input voltage from the source for the high power gain needed for charging the battery for an EV application, this design combines a diode with IGBT switches and a capacitor arrangement.

Conclusion

To lessen the harmonics in the DC output, the current converter design used a larger number of switches and a bulk quantity of filtering components stacked in a cascaded fashion. Certain converter designs use a fixed range of pulse frequencies and component parameters to produce the triggering pulses that are sent to the IGBT switching device. In order to prevent reverse current flow in the circuit, a diode is connected in parallel to the gated switch. This keeps the switching components operating at the high frequency of the controlling pulses that are produced. A number of current model types concentrated on increasing output voltage while achieving high gain. This won't track the error difference between the converter's feedback and the reference voltage that the circuit design specifies. The suggested circuit has been tested using a DC motor as the load to represent the application of an electric vehicle and a DC source as the input for the converter design. The converter design's switch control uses a PWM that is powered externally as a pulse generator. The suggested diode-capacitor hybrid arrangement clamps the voltage more than the input and changes with each other in the unit of boosting the voltage. In order to verify the experimental outcome, this hardware configuration was used for the board's reduced specification setup.

References

Vajedi, M., & Azad, N. L. (2015). Ecological adaptive cruise controller for plug-in hybrid electric vehicles using nonlinear model predictive control. *IEEE Transactions on Intelligent Transportation Systems*, *17*(1), 113-122. https://doi.org/10.1109/TITS.2015.2462843

Wang, L. (2009). *Model predictive control system design and implementation using MATLAB* (Vol. 3). London: springer. https://doi.org/10.1007/978-1-84882-331-0

Di Giorgio, A., Liberati, F., & Canale, S. (2014). Electric vehicles charging control in a smart grid: A model predictive control approach. *Control Engineering Practice*, *22*, 147-162. https://doi.org/10.1016/j.conengprac.2013.10.005

Lopez-Sanz, J., Ocampo-Martinez, C., Alvarez-Florez, J., Moreno-Eguilaz, M., Ruiz-Mansilla, R., Kalmus, J., ... & Lux, G. (2016). Nonlinear model predictive control for thermal management in plug-in hybrid electric

vehicles. *IEEE Transactions on Vehicular Technology*, *66*(5), 3632-3644. https://doi.org/10.1109/TVT.2016.2597242

Kanchwala, H., & Bordons, C. (2015). *Improving handling performance of an electric vehicle using model predictive control* (No. 2015-01-0082). SAE Technical Paper.

Lopez-Sanz, J., Ocampo-Martinez, C., Alvarez-Florez, J., Moreno-Eguilaz, M., Ruiz-Mansilla, R., Kalmus, J., ... & Lux, G. (2017). Thermal management in plug-in hybrid electric vehicles: A real-time nonlinear model predictive control implementation. *IEEE transactions on vehicular technology*, *66*(9), 7751-7760. https://doi.org/10.1109/TVT.2017.2678921

Bolognani, S., Bolognani, S., Peretti, L., & Zigliotto, M. (2008). Design and implementation of model predictive control for electrical motor drives. *IEEE Transactions on industrial electronics*, *56*(6), 1925-1936. https://doi.org/10.1109/TIE.2008.2007547