International Academic Institute for Science and Technology

International Academic Journal of Science and Engineering
Vol. 7, No. 2, 2020, pp. 12-17.

ISSN 2454-3896

International Academic Journal of Science and Engineering

www.iaiest.com

Development of a Power Quality Analysis Tool for Industrial Power Systems

Abhinav Choudhary [a], Priyanka Sharma [b]

[a] *Abhinav Choudhary, Department of Civil Engineering, Lotus College of Engineering and Architecture, Chandigarh, India.*
[b] *Priyanka Sharma, Department of Civil Engineering, Lotus College of Engineering and Architecture, Chandigarh, India.*

Abstract

Power Quality (PQ) is a crucial aspect of power systems, affecting everything from measurement and operation to protection, security, planning, and even economic factors. Poor PQ can lead to relay malfunctions, equipment aging, increased electricity costs, and a host of other issues. That's why it's essential to monitor, investigate, and address these problems swiftly to ensure the safe operation of power systems. This makes real-time PQ analysis a fascinating area for research and development. One effective approach to tackle this issue is the Stockwell Transform (ST), which is widely used in signal analysis. However, the high computational demands of ST present a significant challenge. Enter the Fast Stockwell Transform (FST), which offers a more efficient alternative with lower computational complexity. This paper introduces a Power Quality Analysis (PQA) method utilizing FST, specifically tailored for industrial power systems. The FST is employed to extract PQ signals from the time-frequency domain, and we detail its implementation using the STM32F407VGT6 microcontroller. We also compare the simulation and application results against several common methods to validate the accuracy and efficiency of our proposed algorithm. The simulation outcomes show that our algorithm can effectively detect harmonics, voltage sags, flickers, oscillatory transients, notches, and spikes. Additionally, the experimental results for harmonics align well with those from a well-known commercial product, demonstrating strong agreement.

Keywords: Power Quality, Power Systems Measurement, Microcontroller, Algorithm, Growth.

Received: 10 September 2020/Revised: 22 October 2020/Accepted: 05 November 2020/Published: 31 December 2020

Introduction

Enhanced power quality is a driving force in today's advanced engineering landscape. Over the past decade, consumers have become much more aware of the importance of a reliable power supply. This growing awareness has fueled the development of small power generation systems. These compact generator sets have the potential to meet local energy needs, significantly improving power reliability with minimal initial investment. Moreover, these systems are gaining traction in remote areas where traditional overhead transmission lines are either impractical or too costly to install. Small generation systems can be effectively utilized in various settings, including hilly regions, desert islands, coastal facilities, and rural areas across many countries [1]. Among the various challenges related to power quality, voltage sag stands out as a major concern. Voltage sag refers to a drop in root mean square (rms) voltage to a level between 0.1 and 0.9 per unit, lasting anywhere from half a cycle to a minute. These sags are typically triggered by system faults and can last from 0.5 cycles to 1 minute, depending on how long it takes to resolve the issue. For under-voltages that persist for over a minute, appropriate voltage regulation devices can help manage the situation. Voltage sags primarily occur due to faults, and when these faults happen in the transmission system, they can affect a large number of consumers since the transmission lines serve multiple substations. Even customers located hundreds of miles away from the fault can experience voltage sags, which may lead to equipment malfunctions. Transmission faults can be resolved much more quickly thanks to faster breaker operations [2]. These faults typically occur in power systems due to issues like insulation failure, flashover, material breakdown, or even human error. They can manifest as symmetrical faults, where all three phases are involved, or asymmetrical faults, which usually affect just one or two phases. Additionally, faults may arise from short circuits to the ground or between active conductors, or they could be due to faulty conductors in one or more phases.

Nowadays, the term "power quality" has become increasingly important for both electric utilities and consumers of electrical energy. This is largely because every customer, especially in the commercial sector, desires high-quality electrical energy. Power quality issues—such as short-duration variations (like swells, sags, and interruptions), surges, voltage imbalances, voltage variations, waveform distortions (including DC offsets, inter harmonics, harmonics, notching, and noise), and power frequency deviations—can significantly impact how devices perform on the user side. The concept of power quality has become crucial in the energy sector, with both energy providers and consumers expressing concern over it [3]. Various problems in transmission and distribution lines, such as surges, harmonics, unexpected switching processes, and voltage and frequency variations, can affect power quality. These issues can also lead to damage to consumer electrical devices. To enhance the performance of the power system, it's essential to address and minimize these challenges.

Review of Literature

Power quality refers to how we energize and ground electrical devices in a way that suits their operation. Lately, there's been a noticeable surge in interest surrounding power quality, and it all boils down to the relentless demand for higher output from utility consumers. This growing concern has made power quality a hot topic, especially since many devices connected to various distribution lines—like adjustable speed drives, printers, home utilities, computers, and microprocessor-based equipment—are becoming increasingly sensitive to voltage fluctuations, harmonic distortions, and disruptions. One of the biggest issues in power quality is voltage sag. Commercial users of sensitive devices can face significant financial losses, and in some cases, it can lead to dangerous situations due to these voltage sags, which can cause equipment to malfunction or even get damaged [4]. To tackle these challenges, there are different types of FACTS (Flexible AC Transmission Systems) devices, some connected in shunt and others in series. Integrating these devices into the power system helps enhance both power quality and reliability. Among them, the DSTATCOM has emerged as a promising solution for improving quality. This device utilizes a Fuzzy Logic Controller (FLC) for its operation. Fuzzy logic-based control systems are essential for representing and processing linguistic knowledge, especially when dealing with uncertainty and ambiguity. Most FLCs are crafted based on expert knowledge, typically structured in the form of rule-based performance.

J. Wang and colleagues explored the impact of voltage sags in distribution systems. Nowadays, electronic and power electronic devices are much more sensitive to fluctuations in voltage quality. Manufacturing processes have become less forgiving of equipment malfunctions, and companies are increasingly intolerant of production delays. The main culprits behind these issues are disruptions and voltage sags, with a significant focus in both consultations and literature on the effects of voltage sags and brief interruptions. High-frequency surges rarely get the attention they deserve as a cause of equipment failure. This paper sheds light on the challenges posed by voltage sags.

S. Z. Djokic and team discuss various power quality challenges and how voltage sags affect systems. Energy-efficient devices are at the heart of power quality problems. Adjustable speed drives and energy-saving lamps are notable contributors to waveform distortion and are particularly sensitive to specific types of power quality issues [5]. When these problems hinder the widespread adoption of eco-friendly energy sources and consumer devices,

power quality evolves into an environmental concern with far-reaching implications beyond just financial ones. The deregulation of the electricity sector has heightened the demand for quality indicators, as consumers are increasingly seeking detailed information about the voltage quality they can expect.

M. H. J. Bollen and colleagues present a comparative analysis of different power quality issues. Power electronic equipment, due to their inherent non-linearity, generates harmonics and reactive power from the supply. In three-phase systems, they can also create imbalances and lead to unnecessary neutral currents. The presence of injected harmonics, reactive power loads, imbalances, and excess neutral currents can significantly degrade system performance and reduce the power factor.

Materials and Methods

Today, the reliability and quality of electric energy are among the most important topics in the power industry. There are many different types of power quality issues, each with its own unique nature and consequences. The various power quality problems that customers might encounter can be categorized based on the characteristics of the voltage waveform. These include transients, short-term disturbances like sags and swells, long-term disturbances such as prolonged interruptions, voltage overages and shortages, supply voltage imbalances, waveform distortions like DC offsets, harmonics, unwanted signals, and fluctuations in voltage and supply frequency [6]. Among these issues, two power quality concerns stand out as particularly troublesome for consumers: voltage sags and harmonic-related problems. This thesis will focus specifically on voltage sag issues. Voltage sags can cause significant problems for many people and are considered a serious electrical disturbance today. This issue can lead to equipment failures and dangerous current spikes. Typically, sags are a temporary drop in the RMS value caused by faults in the electrical system or the activation of heavy loads. Voltage sags generally occur in the power system due to faults caused by lightning strikes, vehicle collisions with electric poles, damage to underground cables, or short circuits caused by trees, birds, and other factors. Additionally, the operation of specialized electrical devices like welders and cutters, as well as the energization of large electrical loads, can also lead to voltage sags.

One of the key responsibilities of an electrical system is to deliver electric power to customers with the right amplitudes and frequencies. While the voltage produced by electrical machines in power systems is generally sinusoidal, unexpected factors like severe lightning, short circuit faults, and nonlinear loads can lead to errors, transients, and deviations in current waveforms. Electric furnaces can cause voltage fluctuations, power system converters may introduce harmonics into current waveforms, and short circuit faults can lead to voltage sags and swells. Additionally, major consumer loads such as motors, computers, control equipment, and medical devices are particularly sensitive to power quality issues, and their optimal performance hinges on the quality of the voltage supplied to them [7]. This can only be achieved by ensuring a steady flow of power at the correct voltage and frequency levels. Consequently, FACTS devices and custom power equipment have been integrated into electrical systems to improve power quality. With these devices, it's possible to mitigate many of the challenges associated with power quality. Modern equipment tends to create more power disturbances than before, as both short and heavy power devices are increasingly energized by simple power electronic devices that generate a wide range of distortions.

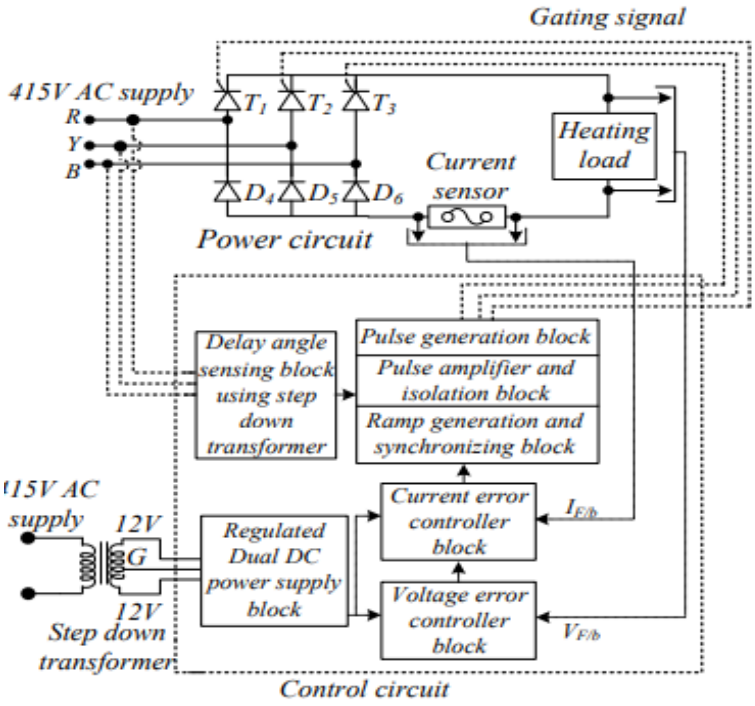

Fig. 1: Block Diagram

There are indications that harmonic distortion in power systems is on the rise, but conclusive results are still lacking due to a shortage of extensive data collection studies. The electronic control of electric power has become a reality thanks to various power electronics devices like Silicon Controlled Rectifiers (SCR) and Metal Oxide Semiconductor Field Effect Transistors (MOSFET). Electrical loads such as furnaces, High Voltage DC (HVDC) transmission systems, and power supplies can be effectively controlled and regulated using these power electronics controllers.

Results And Discussion

Power frequency variations refer to the discrepancies between the actual supply frequency and the ideal frequency of 50Hz. These variations typically arise from changes in load and how generators respond to those changes. As a result, the characteristics of the load, which are linked to frequency, and the control features of the generators work together to manage frequency shifts. In today's interconnected power systems, frequency variations are usually minor, except when governor and load frequency regulators are out of action due to power shortages or grid instability. Implementing cost-effective incentives or disincentives can help maintain a balance between generation and load, which in turn can manage frequency fluctuations during normal operations. Voltage sag is when the voltage drops to a level between 0.1 pu and 0.9 pu, lasting anywhere from half a cycle to a minute.

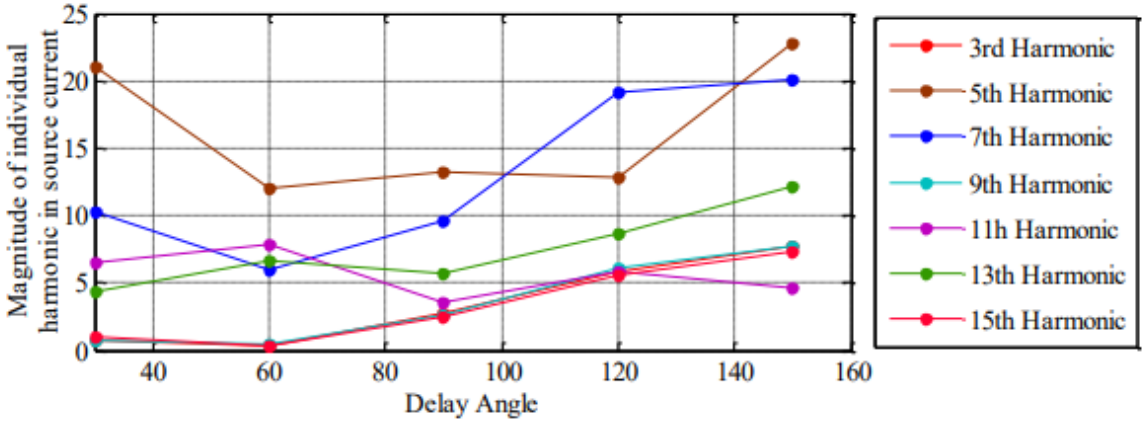

Fig. 2: Variation in Harmonic

These sags often occur due to power system failures and can last from half a cycle to a minute, depending on how long it takes to address the fault. For under-voltages that persist for more than a minute, appropriate voltage regulating devices can be employed to manage the situation. When a transmission line supplies power to multiple substations, any faults in the system can impact a lot more consumers than you might think.

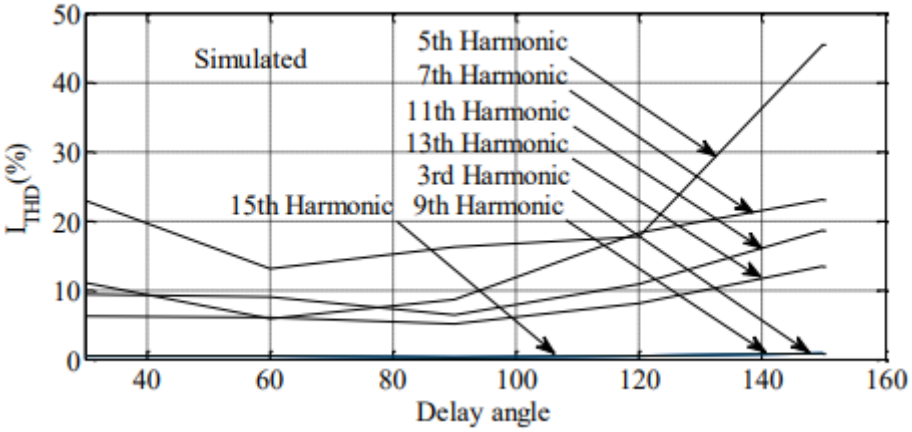

Fig. 3: Variation in Magnitude of Individual Harmonic Component

Even customers who are quite a distance from the fault can feel the negative effects of voltage sag, which can lead to their equipment malfunctioning. Fortunately, transmission faults tend to be resolved quickly thanks to faster breaker operations. Typically, consumers won't face interruptions when there's a fault on the source-side of the transmission system [8]. However, when large electric motors are energized, they can cause voltage sag because they draw a significant amount of current, often exceeding the full load current at startup. Additionally, the power factor of this initial current is usually quite low. For commercial consumers, any sensitive devices they use can suffer heavy financial losses, and this situation can escalate into very dangerous circumstances due to voltage sag.

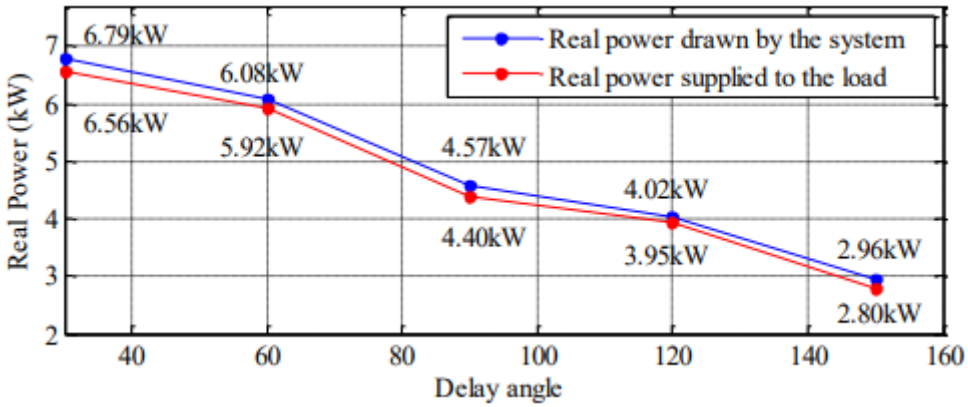

Fig. 4: Variation in Real Power

The quality of power distribution has become a top priority in the power sector. To maintain this quality, it's essential to address the issues that affect it in a professional manner. Voltage sags, while often unavoidable, can be minimized through various methods, though not all approaches will work for every situation. As consumers of power strive for better quality, it's the responsibility of system engineers to tackle these power quality challenges. Essentially, while we can't completely eliminate power quality problems, we can certainly reduce them and should aim to avoid their root causes. Among the many power quality issues, voltage sag stands out as particularly significant. The challenges faced by researchers have driven them to delve deeper into power quality problems and their solutions. Voltage sag is considered one of the most serious power quality issues because sensitive loads can easily be affected by even brief voltage fluctuations. This thesis presents various methods for mitigating voltage sags. One effective approach identified is the use of DSTATCOM. To test whether DSTATCOM can effectively mitigate voltage sags, simulations were conducted using MATLAB Simulink to model the distribution system.

Conclusion

The results from these simulations clearly demonstrate that the DSTATCOM device can successfully address the voltage sag problem. In this study, we've discovered that using various optimization algorithms, such as the PSO algorithm, the FF algorithm, and the hybrid PSO-FF algorithm, provides a practical approach for optimizing the rule base of fuzzy logic controllers. Fuzzy Logic Controllers (FLCs) can manage non-linear systems more effectively than traditional linear controllers because they offer greater flexibility in mapping inputs to outputs. While designing a fuzzy controller typically requires specialized knowledge through conventional methods, this report demonstrates that even without any prior knowledge of the system, a hybrid optimization algorithm can quickly create an effective controller. This technique could significantly increase the adoption of FLCs, as it drastically reduces the time-consuming design process. The hybrid algorithm has proven to be a powerful search tool that minimizes the time and effort needed for designing systems where no systematic design process is available. They are undoubtedly valuable tools for tackling analytically complex problems.

References

Khalid, S., & Dwivedi, B. (2011). Power quality issues, problems, standards & their effects in industry with corrective means. *International Journal of Advances in Engineering & Technology*, *1*(2), 1-11.

Ghosh, A., & Ledwich, G. (2012). *Power quality enhancement using custom power devices*. Springer science & business media.

Khadkikar, V. (2011). Enhancing electric power quality using UPQC: A comprehensive overview. *IEEE transactions on Power Electronics*, *27*(5), 2284-2297. https://doi.org/10.1109/TPEL.2011.2172001

Wagner, V. E., Andreshak, A. A., & Staniak, J. P. (2002). Power quality and factory automation. *IEEE Transactions on industry applications*, *26*(4), 620-626. https://doi.org/10.1109/28.55984

Chung, I. Y., Won, D. J., Kim, J. M., Ahn, S. J., Moon, S. I., Seo, J. C., & Choe, J. W. (2003, July). Development of power quality diagnosis system for power quality improvement. In *2003 IEEE Power Engineering Society General Meeting (IEEE Cat. No. 03CH37491)* (Vol. 2, pp. 1256-1261). IEEE. https://doi.org/10.1109/PES.2003.1270509

Granados-Lieberman, D., Romero-Troncoso, R. J., Osornio-Rios, R. A., Garcia-Perez, A., & Cabal-Yepez, E. (2011). Techniques and methodologies for power quality analysis and disturbances classification in power systems: a review. *IET Generation, Transmission & Distribution*, *5*(4), 519-529. https://doi.org/10.1049/iet-gtd.2010.0466

Baggini, A. (2008). *Handbook of power quality*. John Wiley & Sons.

Arrillaga, J., Watson, N. R., & Chen, S. (2000). *Power system quality assessment*. John Wiley & Sons.