International Academic Institute for Science and Technology

International Academic Journal of Science and Engineering
Vol. 7, No. 2, 2020, pp. 33-37.

ISSN 2454-3896

International Academic Journal of Science and Engineering

www.iaiest.com

Economic and Environmental Impacts of Grid-Connected Solar Energy

Kiran Joshi [a], Seema Bedi [b]

[a] *Department of Mechanical Engineering, Shiva School of Technology, Kanpur, India.*
[b] *Department of Mechanical Engineering, Shiva School of Technology, Kanpur, India.*

Abstract

The evaluation of renewable energy systems' efficacy heavily relies on resource optimization. Researchers have used a variety of techniques to size and plan grid-connected photovoltaic installations. In this study, we have developed a rule-based energy management method to determine the optimal size of a grid-connected photovoltaic system, the amount of energy received from the grid, and the amount of energy given to the external utilities at the same time. The proposed rule-based energy management system considers both the PV system's economic and non-economic characteristics. In order to maximize profits for developers and customers, three competing target functions are taken into consideration: minimizing the overall estimated system costs, which include investment, replacement, and operation and maintenance expenses. Customers' ideal size and electricity costs are examined in relation to popular EV models on the market. A number of sensitivity studies are used, taking into account changes in the retail price, feed-in tariff, and grid constraints. To confirm that the constructed model produces the best results, uncertainty analysis based on fluctuations in load, temperature, and insolation is presented.

Keywords: Rule-Based Energy Management, Photovoltaic, Grid-Connected PV System, Photovoltaic Panel.

Received: 17 September 2020/Revised: 29 October 2020/Accepted: 12 November 2020/Published: 31 December 2020

Introduction

Considerable work has gone into enhancing on-grid photovoltaic systems while integrating them with traditional power plants in many nations. Both the distribution utility and the consumers can profit from such systems' environmental advantages. The selling of surplus photovoltaic energy to the grid by customers who live close to it benefits the customers (Allouhi et al., 2019). The authors provided evidence that the annual growth-rate trend of on-grid electricity production has increased and that it now dominates the PV energy market. The world economy is expanding at an exponential rate, which is driving up demand for electricity. However, environmental pollution and the electrical crisis are also continuously arising (Pérez-Gallardo et al., 2014). The growth of the global economy is intimately linked to the need for power. As the global economy grows, so does the need for energy to run homes, businesses, and industries. The information about the global electrical market (Kumar, 2020) show this increase in demand. The global use for power increased by about 6% in 2021, indicating robust economic expansion. But in 2022, the growth in electricity demand fell to 2.4%, which was in line with a somewhat slower pace of economic expansion (Memar et al., 2017). Reports on the worldwide electricity market demonstrated the expansion of demand, with global GDP growing by 5.9% in 2021 and 4.9% in 2022. This illustrates how challenging it is to meet the growing demand for electricity while minimizing negative environmental effects. The earth and human health may suffer greatly as a result of environmental degradation brought on by the growing usage of fossil fuels to produce power.

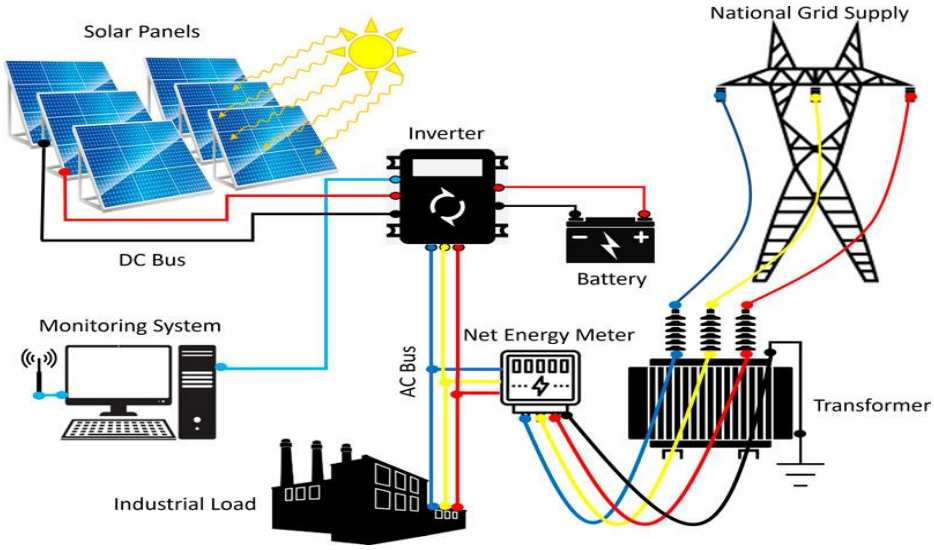

Figure 1: Grid-Connected Solar Energy

Finding sustainable alternatives is essential to meeting the growing demand for electricity while lessening the environmental impact. This can be accomplished through putting into practice environmentally friendly technologies, energy efficiency (EF) measures, and renewable energy sources (RESs). The integration of as many renewable energy resources as possible is urgently needed at this time to mitigate the negative effects of greenhouse gas emissions, voltage quality issues, power reliability, inflated grid extensions, unserved remote areas, and power loss shortcomings of conventional power plants (McKenna et al., 2013).

Proposed Methodology

A rule-based energy management method determines the optimal size of a grid-connected photovoltaic system, how much energy it receives from the grid, and how much energy it simultaneously provides to external utilities. The proposed rule-based energy management systems consider both the PV system's non-economic and economic characteristics. Three conflicting aim functions are taken into account in order to optimize profitability for developers and clients: minimizing the overall estimated system costs, which include investment, replacement, and operation and maintenance expenses.

The excess power is imported from the main grid when the power generated by the PV system is less than the total power of the load and EV. However, any excess power is sold or exported to the grid if the solar PV produces enough power to power the load and the grid limit is less than the sum of the PV's power plus the battery's input power (Farangi et al., 2020).

Grid-Connected PV System

This research paper's primary objective is to provide a novel method for sizing a grid-connected photovoltaic system with storage components over a 20-year period based on both economic and non-economic analysis in order to improve the system's viability, profitability, and dependability. The development of a comparable electric model demonstrates the performance of the PV on-grid system (Bernal-Agustín & Dufo-López, 2006). This study focuses on hourly traded energy, grid providers' thermal power usage, current, voltage, battery state of charge (SOC), and economic estimations. The proposed methodology seeks to establish a PV-battery system that can efficiently flatten about 95% of the daily load profiles up to a certain demand threshold. There is also a fair level of operational risk in this plan. More precisely, the system may not be able to manage the highest five percent of daily demand peaks. It is anticipated that utilities will buy more energy from their primary power suppliers in these conditions (Fernández-Infantes et al., 2006).

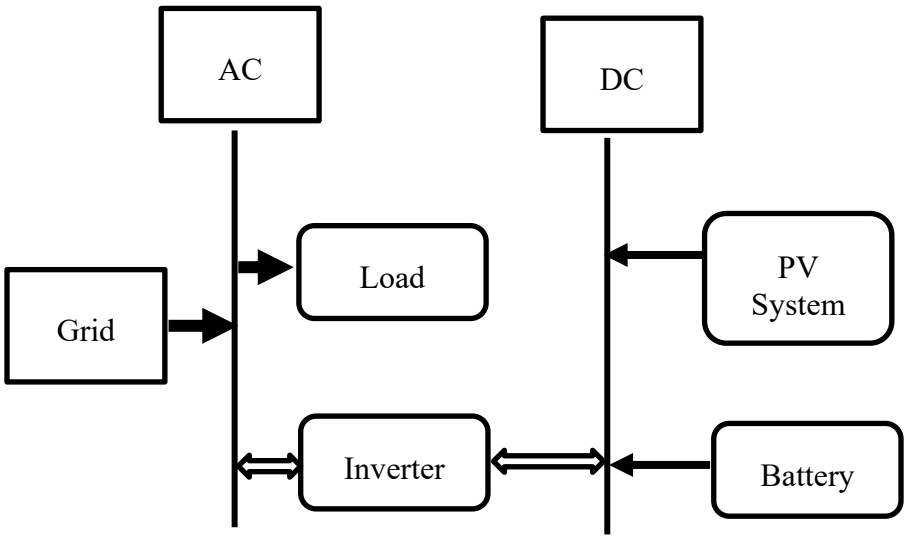

Figure 2: Block Diagram of Grid-Connected PV System

Solar PV arrays, an electric grid, a direct current/alternating current (DC/AC) inverter, demand utilities, and external utilities make up the grid-connected PV system under consideration, as shown in Fig. 3.

Experimental Result

The optimization findings for two system setups are initially shown in this section. After that, an economic analysis based on the various EVs that are now on the market is presented. To examine how grid constraint, RP, and FIT affect the optimization outcomes, sensitivity analyses are provided. On a 48-hour basis, the functioning of the grid-connected home with PV, BES, and EV is examined. Now that the article's objectives are to generate energy from a clean source at a fair price and because this mode doesn't produce pollution during the energy production through the network, the 100 kW mode of the photovoltaic system and the 80 kW inverter without energy storage are a suitable combination for the connection to the grid. Furthermore, this mode is less costly than the photovoltaic system with storage mode.

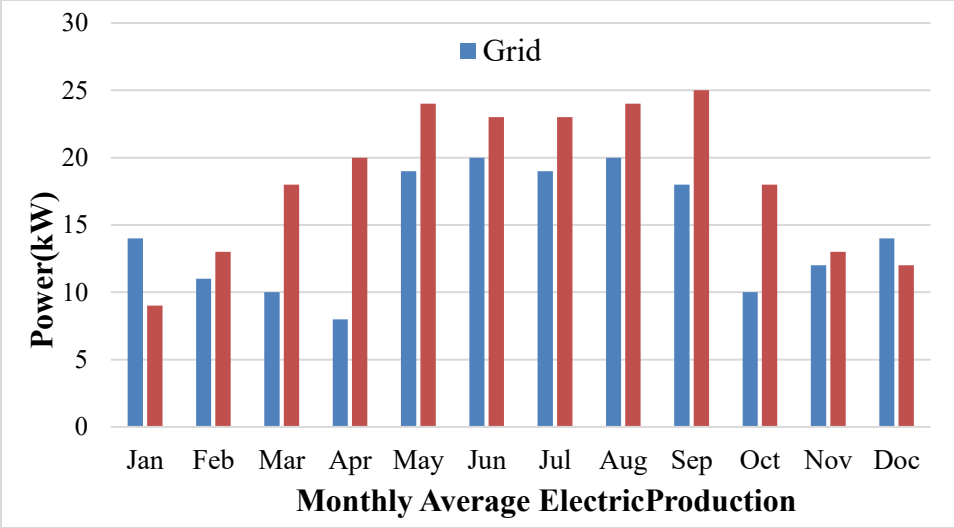

Figure 3: Monthly Average Electrical Energy Production for a Photovoltaic System Connected to the Grid with Energy Storage

A PV-EV's daily power flow is examined in order to assess how the system functions. As seen in Figure 2, this is finished over 48-hour periods for both the summer and the winter. All of the loads are supplied by the grid overnight during the summer. Between around 7 and 10 am, the BES partially supplies the load, reducing imported power to zero at the BES's maximum output.

Around 8 a.m., when the sun is shining, the PV begins to produce electricity to power the load. In the morning, the load also begins to increase. The remaining power generated by the PV is transferred to the grid until approximately 8 p.m., when the sun sets on South Africa's summer day.

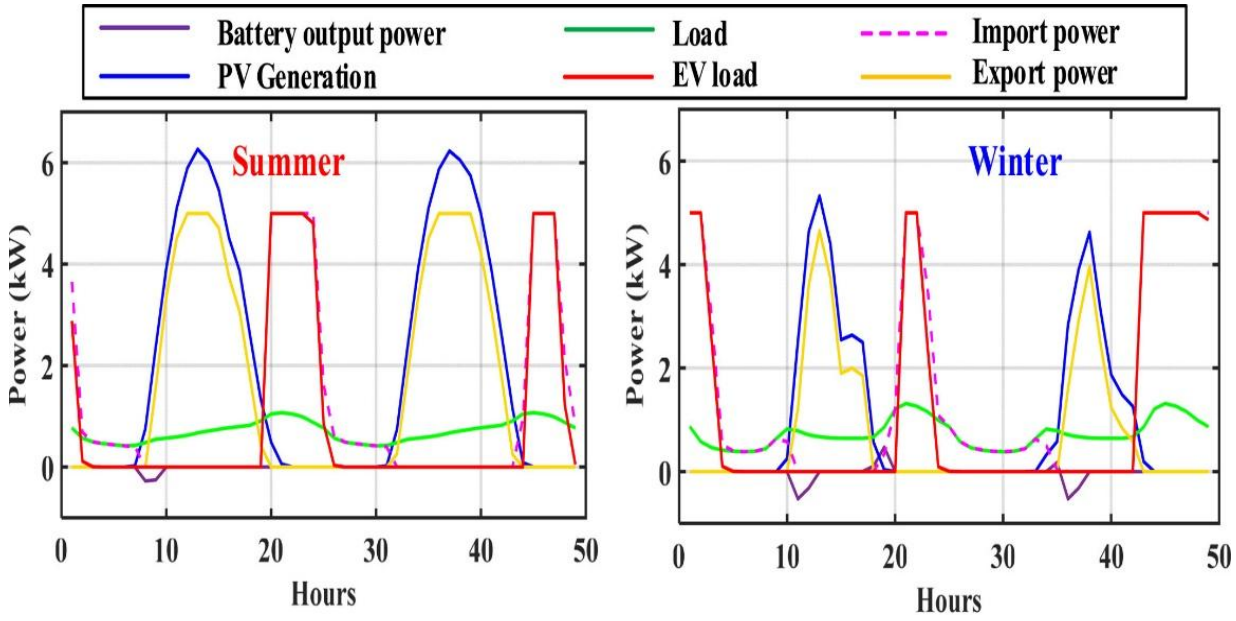

Figure 4: Daily Power Flow for PV Across Two 48-Hour Summer and Winter Seasons, Including Load Power, Photovoltaic (PV) Power, and Export Power

When the EV returns at the end of the day and begins charging at around 7 p.m., all of the energy required for this needs to be imported from the grid. When the car stops charging at two in the morning, the imported electricity is equal to the domestic load, which is low throughout the night. Figure 4 illustrates how this pattern repeats itself over the course of the following 24 hours.

Conclusion

In order to minimize energy costs for grid-connected families using electric vehicles, this study devised a rule-based system for sizing solar PV and batteries. Two new energy management systems for the PV-EV and PV-BES-EV combinations were developed. According to the fluctuations in load, insolation, and temperature, the uncertainty analysis validated the PV and BES ideal capabilities. So, in order to maximize profit for developers and customers alike, three competing objective functions are taken into consideration: minimizing the overall predicted system costs, which include operation and maintenance, investment, and replacement costs. Future research endeavors may pursue a double development of the conducted optimal sizing problem. Prior to anything else, larger systems, like apartment complexes with multiple EVs, may have their scalability examined. Secondly, dynamic power tariff structures can be taken into account by extending the system model. The ideal size model would stay the same for this purpose, but the new tariff rate should be used to compute the annual electricity expense. To achieve new optimal outcomes and guidelines, the energy management systems' rules should be modified in accordance with the tariff structure's electricity rate.

References

Allouhi, A., Saadani, R., Buker, M. S., Kousksou, T., Jamil, A., & Rahmoune, M. (2019). Energetic, economic and environmental (3E) analyses and LCOE estimation of three technologies of PV grid-connected systems under different climates. *Solar Energy*, *178*, 25-36. https://doi.org/10.1016/j.solener.2018.11.060.

Pérez-Gallardo, J. R., Azzaro-Pantel, C., Astier, S., Domenech, S., & Aguilar-Lasserre, A. (2014). Ecodesign of photovoltaic grid-connected systems. *Renewable Energy*, *64*, 82-97. https://doi.org/10.1016/j.renene.2013.10.027.

Kumar, M. (2020). Social, Economic, and Environmental Impacts of. *Wind solar hybrid renewable energy system*, 227.

Memar, M. R., Moazzami, M., Shahinzadeh, H., & Fadaei, D. (2017, April). Techno-economic and environmental analysis of a grid-connected photovoltaic energy system. In *2017 Conference on Electrical Power Distribution Networks Conference (EPDC)* (pp. 124-130). IEEE. https://doi.org/10.1109/EPDC.2017.8012752.

McKenna, E., McManus, M., Cooper, S., & Thomson, M. (2013). Economic and environmental impact of lead-acid batteries in grid-connected domestic PV systems. *Applied energy*, *104*, 239-249. https://doi.org/10.1016/j.apenergy.2012.11.016.

Farangi, M., Soleimani, E. A., Zahedifar, M., Amiri, O., & Poursafar, J. (2020). The environmental and economic analysis of grid-connected photovoltaic power systems with silicon solar panels, in accord with the new energy policy in Iran. *Energy*, *202*, 117771. https://doi.org/10.1016/j.energy.2020.117771.

Bernal-Agustín, J. L., & Dufo-López, R. (2006). Economical and environmental analysis of grid connected photovoltaic systems in Spain. *Renewable energy*, *31*(8), 1107-1128. https://doi.org/10.1016/j.renene.2005.06.004.

Fernández-Infantes, A., Contreras, J., & Bernal-Agustín, J. L. (2006). Design of grid connected PV systems considering electrical, economical and environmental aspects: A practical case. *Renewable Energy*, *31*(13), 2042-2062. https://doi.org/10.1016/j.renene.2005.09.028.