International Academic Institute for Science and Technology

International Academic Journal of Science and Engineering
Vol.6, No. 1, 2019, pp.39-50.
ISSN 2454-3896

International Academic Journal of Science and Engineering

www.iaiest.com

The Influences of Soil Ionization in the Grounding System and Corona Phenomena on the Injection Lightning Current of 1000 KV UHV Transmission Line

Ebadollah Amouzad Mahdiraji, Nabiollah Ramezani

University of Science and Technology of Mazandaran, Behshahr, Iran

Abstract

This paper investigates the 1000 KV UHV transmission line under the 100 KA lightning impulse on the overhead guard wire with considering the corona phenomena and soil ionization in high frequency grounding system. In this study, four cases of transient electromagnetic current status of the transmission line power system have been analyzed with EMTP-RV software. The results of this procedure depict that the soil ionization in the absence of the corona phenomenon can be caused an attenuation of the lightning current waves. But with considering the corona phenomena and Soil ionization, all together, this reduction of the resultant waves propagation from a lightning strike on a 1000 KV UHV transmission line is not visible due to high charging of the corona phenomena.

Keywords: Soil ionization, corona phenomena, injection lightning Current, electromagnetic transients.

DOI:10.9756/IAJSE/V6I1/1910004

Received: 09 March 2019/Revised: 06 April 2019/Accepted: 10 May 2019/Published: 28 June 2019

1. Introduction

The earthing system, containing a network of horizontal and vertical conductors, is an important part of any distributed electrical system such as electrified railway system, communication tower, power system and large building. Often it is required to estimate the influence of the earthing system on the spread of voltage and current within the electrical system during lightning impulse. In this purpose, many researchers have developed different models for analyzing the transient signal behavior of earthing system under lighting impulse. These models can be classified as circuit approach (M. Ramamoorty et al., 1989, A. Geri (1999), A. Geri and S. F. Visacro (2002) and A. F. Otero et al., (1999)). Transmission line approach can be either in time domain or in frequency domain, it could include all the mutual coupling between the different parts of the earth wires, and at the same time could predict surge propagation delay. For the UHV transmission line approach, the authors in (A. p. Meliopouls and M. G. Moharam (1983), A.
D. Papalexopoulos and A. P. Meliopulos (1987)) applied the UHV transmission line concept only to each of the small segments of the grounding conductors in order to derive the equivalent resistive matrix for solving equation of circuit. The Network Approach, which models an earth conductor as equivalent x-circuits made up of lumped RLC elements. The coupling of earth conductors can be taken into account by mutually coupled inductances. Among others, Velazquez and Mukhedkar describe the procedure (R. Velazquez and D. Mukhedkar (1984)). The Electromagnetic Field Approach exhibits the most rigorous theoretical background of all three approaches. Strictly based on the theorems of electromagnetism and with the least neglects possible, the problems are defined in terms of retarded potentials, and among the possible strategies for their solution, the method of moments proved to be most efficient. Dawalibi could translate the highly complex relationships into practical, engineering program (F. Dawalibi and A. Selbi (1992)).

Releases waves resulting from lightning have an important role in the design of UHV transmission lines. Many studies of lightning strikes have been carried out in view of the corona. Corona reduces the impedance of the conductor and increase the coupling factor between the lines (V. Cooray and N. Theethayi (2008), M Kudyan and C. H. Shih (1981), M. Mihalescu-Suliciu and I. Sulicuiu (1981), T. H. Thang et al., 2012 and C. de Jesus and M. T. Correia (1994)). When the voltage in the conductor goes beyond from corona inception voltage, electric charging data not only on the surface of the conductor but also production in the adjacent conductor (T. Noda et al., 2003).Typically, the electrical charging in Q-V curve, used to show characteristics of Corona phenomena impulses (A. Inoue (1985), P. S. Maruvado et al., 1989 and X. R. Li et al., 1989). Numerous laboratory studies on Corona characteristics impulse was done in contactors cages (R. Davise et al., 1961 and P. S. Maruva da et al., 1977).However, various experiments is done on lightning impulse on the 1000 KV UHV transmission lines under positive and negative polarity (G. V. Podporkin and A. D. Sivaev (1997), T. Narita and S. Okabe (2002)). In the study of high-voltage transmission line project, electromagnetic environments are considered as the key technical problems. One of the electromagnetic environment is corona characteristics in the power system transmission line (J. G. Anderson (1982)).

In this paper surveys the effects of corona phenomena and soil ionization on the charging data caused by 100 KA lightning strike in 1000 KV UHV transmission line. Also be able to fully understand of corona impulse characteristics and understanding the actual wave processes in modelling and understand a proper design of electromagnetic transient of power system.

2. Corona phenomena and Q-V curve characteristics

Corona Model explained Based on Q-V curve. When the voltage of the air around the conductor increases of a specific value, corona voltage is generated and the air around the conductor ionized and the electrical charge stored. This phenomena called Corona which may involve in the transmission line and increase the capacitance of transmission lines. The characteristics of this phenomena showed by Q- V curve. Some models presented in the form of equivalent circuit and others are in the form of linear approximation of the Q-V curve. All of these are dependent on instantaneous voltage line. The experimental results shows that the corona effect on the slope of the voltage waveform.

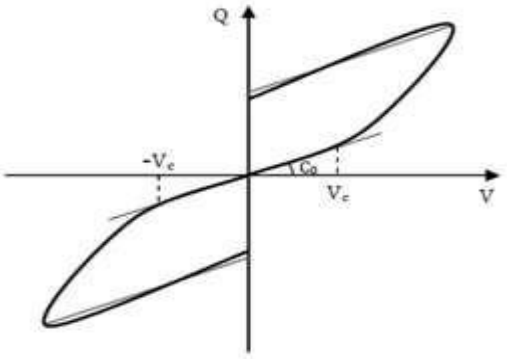

Figure 1. Q-V curve characteristics of transmission line

Corona impact analysis on the performance of lightning UHV transmission lines has been paid by using the EMTP-RV software. In some areas with frequent lightning strikes and high resistance soil, there is more possibility of a lightning strike to the transmission line. In this method as an economy result, increase the probability of a lightning strike caused an increase of among of electrical charging and electrical discharge. Therefore detailed assumptions lightning protection function and improve power system stability important for the design of Ultra high voltage transmission lines (Mootab et al., 2009).3- phase of corona phenomena runs in EMTP-RV software. In Figure 2, C22, C23 and C24 are coupling capacitance between phases in the corona model. In the proposed model C14, C17 and C26 showed capacitance between the line and the corona and C15, C18 and C21 showed capacitance between the corona and earth. In the simulation L and R have assumed as series. DC5, DC6 and DC7 are starting voltage of corona. Before the voltage of transmission line reached to the corona starting voltage, Diode is switch off and dose not conduct but when the voltage of transmission line exceed from starting voltage, diode is switched on and conducts. In this simulation, each 100 meters corona model will be added to Ultra high voltage transmission line. Figure 3 shows section of transmission line with corona model. In this corona model L = 0.064 mH and R = 16 Ω (C. Sandoval (1991)).

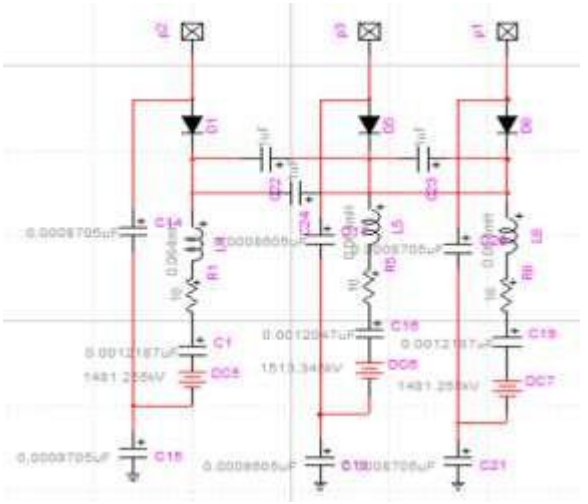

Figure 2. Corona 3-phase equivalent circuit in a transmission line

2.1. UHV transmission line discretization

Ultra high voltage alternating current transmission line is divided into different sections and non-linear circuit capacitive added to the electromagnetic transient models. The proposed corona model, if the discretization of ultra high voltage transmission line is not choose correctly the corona model may cause wave deformation. So to get accurate results, the transmission line is divided into sections of 100 meters.

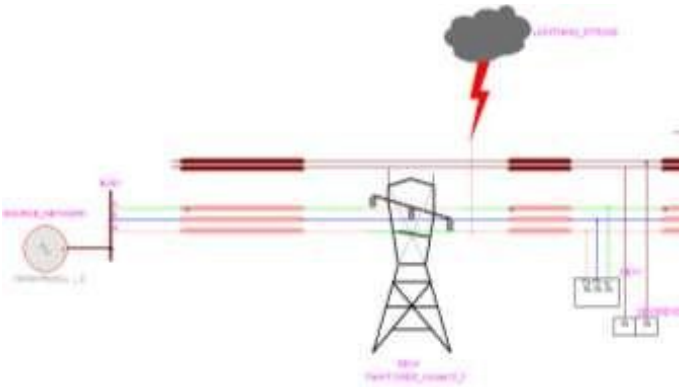

Figure 3. A 100 meter section of the simulation model

3. High Frequency Grounding System With Soil Ionization

In general, the methods of analyzing high-frequency model of the grounding system and dynamic behavior in the discharge of lightning current, classified to the three methods: circuit theory method, transmission line theory method and electromagnetic field theory. In this paper circuit theory method was used. A simple method as shown in figure 4 used to model grounding system in high frequency with considering soil ionization.

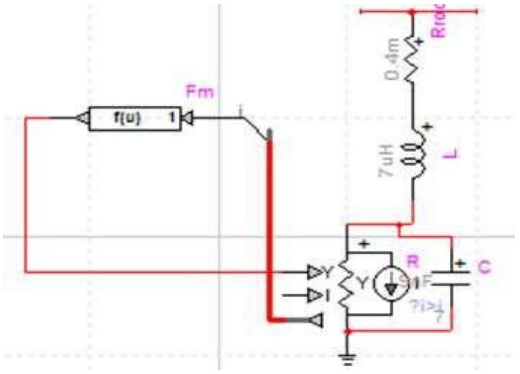

Figure 4. Grounding electrode impedance circuit model with considering the effect of soil ionization

In this study, vertical copper electrode is used. Calculate the electrical resistance, capacitance and inductance is defined as follows:

$$RT(t) = \frac{\quad}{\sqrt{1\ \ }} \tag{1}$$

$$Ig = \frac{\quad}{\quad} \tag{2}$$

$$C(F) = \frac{2\pi\varepsilon l}{\ln(\frac{4l}{a}) - 1} \tag{3}$$

$$L(H) = \frac{\mu l}{2\pi}\left(\ln\frac{4l}{a} - 1\right) \tag{4}$$

(R_t) Low flow resistance base and (I_g) is current limiting to start soil ionization. (I_g) related to soil ionization gradient (E_g) and also soil resistance (P_h). In this research electrode diameter is 16 mm and the electrode length is 2 m and also depth of electrode burial is 0.5 m. It should be noted that in this study the high frequency grounding systems use vertically buried (Grcey and Popov M (2009), Imece et al (1996), Sunde ED (1949) and Grcev L (2009)).

4. The components of the 1000-KV UHV transmission line

Specifications of the transmission line is 1.6 km, consists of three two-bundle conductor with FD LINE model. Space bundle is 400 mm, conductor radius is 30 mm. air coefficient specific gravity (δ = 1) and Conductor surface roughness coefficient (m = 0.82). The guard wire were considered with a 16 mm radius. In transmission line suspension height of sag have been considered, 17 meters and in the guard wire, 15 meters (M. Khalifa (1990) and J. R. Marti et al., (1995)).

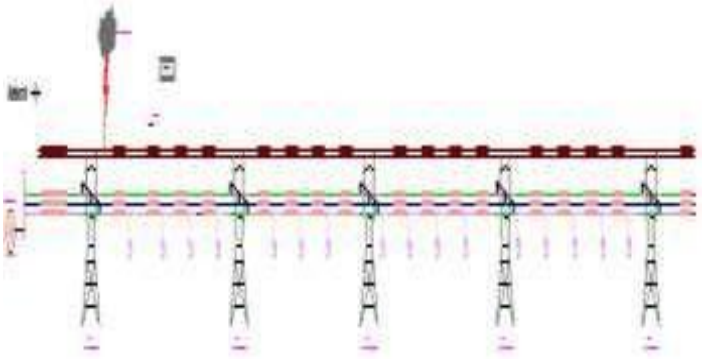

Figure 5. Transmission line simulated by software EMTP-RV

4.1. The model of injection lightning current

In this simulation of lightning current, double exponential function 50/2.5 μs is used. Lightning current source model is intended 100 KA.

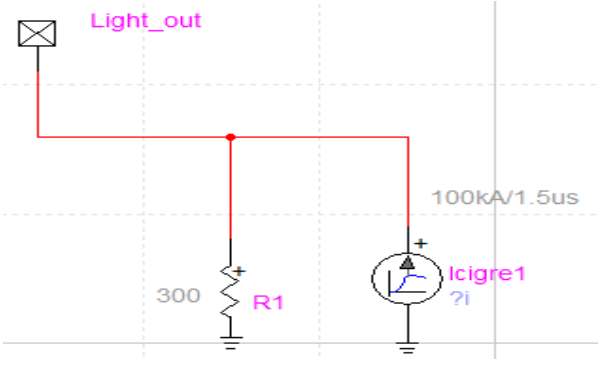

Figure 6. A 100 KA Lightning model on guard wire

4.2. UHV transmission line tower and insulator back flashover models

Ultra high voltage tower model is of type multi wave impedance model which contains three sub-layers and each sub-layer of tower include resistance and parallel inductance. The multi wave impedance model towers components in high voltage alternating current transmission line attenuation constant ($\gamma = 0.7$) and Damped liquidity ratio ($\emptyset = 1$) according to reference (W. B. Zhang et al., 2002). In the software EMTP- RV insulator back flashover phenomena are simulated with a switch that consists of input and output signal. The maximum electrical discharge voltage of Insulation filament considered 6 MV.

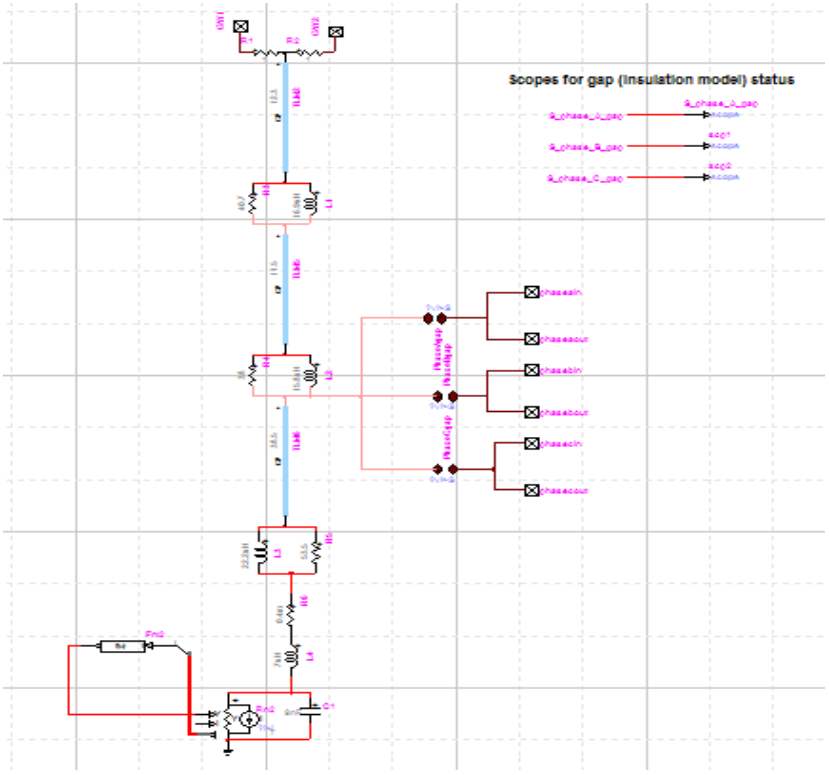

Figure 7. Insulator back flashover of Insulation filament and UHV tower models

5. Analysis of injection lightning current on UHV transmission line

Assessment of the current in 1000 KV UHV transmission line with the length of 1.6 km was done with EMTP-RV software. In this study, four test in different modes of current with 100, 300, 600, 900 and 1200 meters distance of the Point lightning strike with 100 KA was done in power transmission line system.

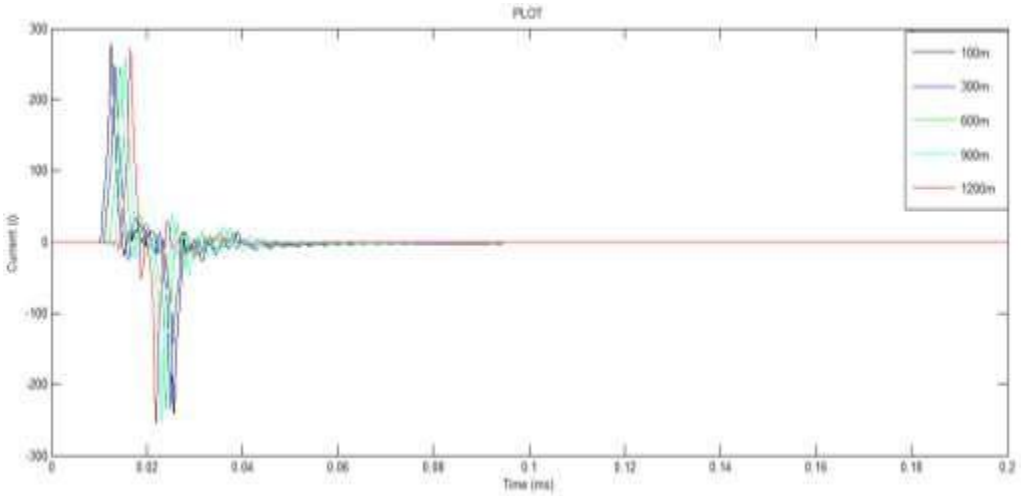

Figure 8. Current of UHV transmission line without soil ionization and corona phenomena

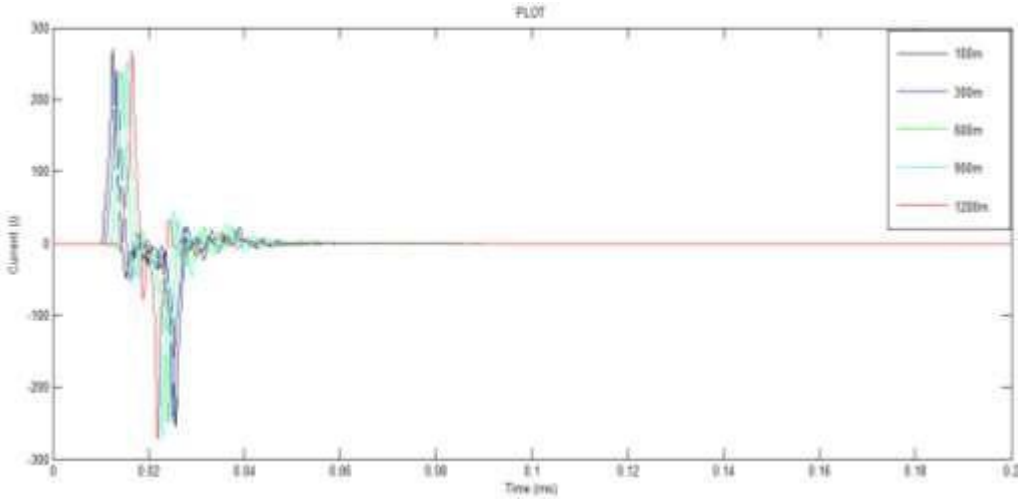

Figure 9. Current of UHV transmission line with soil ionization and without corona phenomena

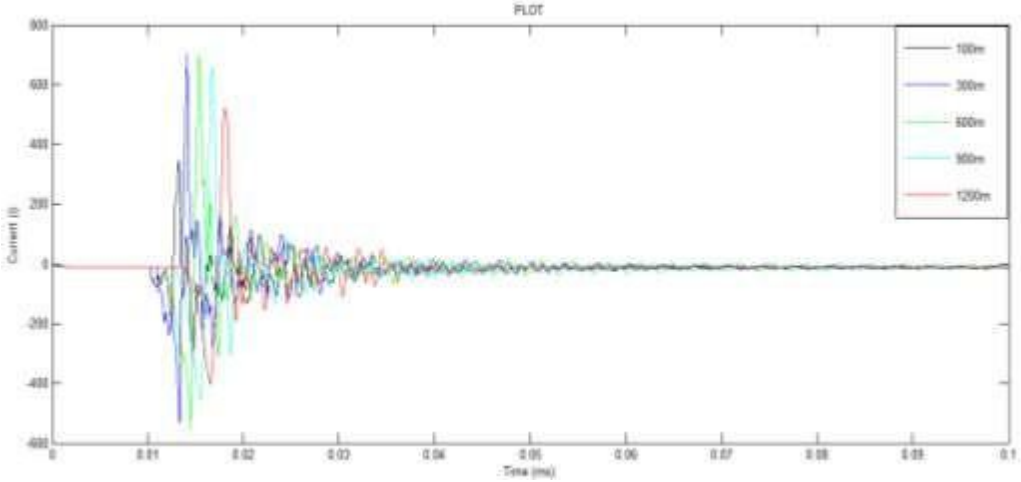

Figure 10. Current of UHV transmission line with soil ionization and corona phenomena

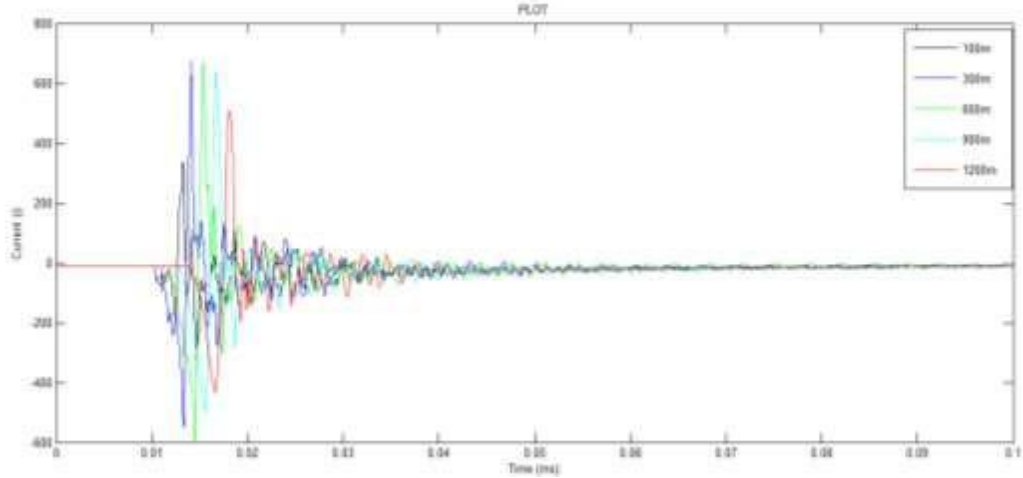

Figure 11. Current of UHV transmission line with corona phenomena and without soil ionization

For a more detailed analysis of the output of the transmission line under lightning impulse 100 KA, Table 1 was prepared by ampere unit. This table current analysis in a variety condition of soil ionization in the high frequency grounding system and corona phenomenon in distances of 100, 300, 600, 900 and 1200 meters from the point of lightning strike. The results show that soil ionization of the absence of ionization in grounding Systems, Damped and attenuation in the signal current creates alternating current transmission line. But the attenuation in the soil ionization with corona phenomenon due to the corona charging data cannot be seen.

Table 1. Analysis of the injection current of 1000 KV UHV transmission line

	100 m	300 m	600 m	900 m	1200 m
Current with soil ionization and corona (A)	346.84	702.70	697.14	656.06	520.91
Current with soil ionization and without corona (A)	270.83	241.15	235.54	254.33	269.40
Current with corona and without soil ionization (A)	337.93	674.75	669.72	635.37	509.14
Current without corona and soil ionization (A)	279.11	248.64	245.35	259.23	272.84

6. Conclusion

In this paper, various analyzes was done on injected current 100 KA from a lightning strike in alternative high-voltage transmission lines 1000 KV UHV by EMTP-RV software. In this simulation, injection current releases in the transmission line with considering the various status of soil ionization in the high- frequency grounding system and corona phenomena was evaluated in distances of 100, 300, 600, 900 and 1200 meters from the point of lightning strike. The output from the transient electromagnetic current of power system transmission line showed that considering the soil ionization in the high frequency grounding system in UHV transmission line will reduce the current. But with considered the soil ionization in the high-frequency grounding system and corona phenomena, attenuation and reduce the amplitude in the transmission line was not observed. The reason for this lack of attenuation was high charging of corona phenomena around conductor which prevents soil ionization influence on the propagation waves.

References

A. Inoue, Mar. 1989. Propogation analysis of overvoltage surges with corona based upon charge versus voltage curve, IEEE Trans. Power App. Syst., vol. PAS-104, no. 3, pp. 655–662.

A. F. Otero, J. Cidras, and J. L. del Alamo, Jul. 1999. Frequency-dependent grounding system calculation by means of a conventional nodal analysis technique, IEEE Trans. Power Del., vol. 14, no. 3, pp. 873–878.

A. Geri, Jul. 1999. Behavior of grounding systems excited by high impulse currents: the model and its validation, IEEE Trans. Power Del., vol. 14, no.3, pp. 1008–1017.

A. Geri and S. F. Visacro, Sep. 2002. Grounding systems under surge conditions: comparison between a field model and a circuit model, in ICLP, Cracow, Poland, 2–6.

A. D. Papalexopoulos and A. P. Meliopulos,Oct. 1987. Frequency dependent characteristics of grounding systems, IEEE Trans. Power Del., vol. 2, no. 4, pp. 1073–1081.

A. P. Meliopoulos and M. G. Moharam,Feb. 1983. Transient analysis of grounding systems, IEEE Trans. Power App. Syst., vol. PAS-102, no. 2.

C. de Jesus and M. T. Correia de Barros, Jul. 1994. Modelling of corona dynamics for surge propagation studies, IEEE Trans. Power Del., vol. 9, no. 3, pp. 1564–1569.

C. Sandoval, 1991. Evaluation of corona and line models in electromagnetic transients simulation, IEEE Transactions on Power Delivery, vol. 6, no. 6, pp. 334-342.

F. Dawalibi and A. Selbi, 1992. Electromagnetic Fields of Energized Conductors, IEEEIPES I992 Summer Meeting Paper 92 SM 456-4 PWRD.

Grcev L, Popov M. 2005, On high-frequency circuit equivalents of a vertical ground rod. IEEE Transaction on Power Delivery; 20(2): 1598–1603.

Grcev L. 2009, Modeling of grounding electrodes under lightning currents. IEEE Transactions on Electromagnetic Compatibility; 51(3): 559–571.

G.V. Podporkin and A. D. Sivaev, Oct. 1997. Lightning impulse corona characteristics of conductors and bundles, IEEE Trans. Power Del., vol. 12, no. 4, pp. 1842–1847.

H. M. Kudyan and C. H. Shih, Mar. 1981. A nonlinear circuit model for transmission lines in corona, IEEE Trans. Power App. Syst., vol. PAS-100, no. 3, pp. 1420–1430.

Imece A, Durbak D, Elahi H, et al.1996, Modeling guidelines for fast front transients. IEEE Transaction on Power Delivery ; 11(1): 493–506.

J. G. Anderson, 1982. Transmission Line Reference Book, 345 kV and Above, 2nd ed. Palo Alto, CA, USA: Elect. Power Res. Inst., ch. 12.

J. R. Marti, F. Castellanos, and N. Santiago, 1995. Wide-band corona circuit model for transient simulations, IEEE Transactions on Power Systems, vol. 10, no. 4, pp. 1003-1013.

M. Khalifa, 1990. High-voltage engineering: theory and practical, New York: Marcel Dekker Inc.

M.Mihailescu-Suliciu and I. Suliciu, Aug. 1981. A rate type constitutive equation for the description of the corona effect, IEEE Trans. Power App. Syst., vol. PAS-100, no. 8, pp. 3681–3685.

Mootaab , A .S ., Fathi , A.S ., and Vahidi , B . 2009. State-Space transient Analysis pf corona for AC and Impulse Voltage : Electric power and Energy Conversion System , International Conference . November 10-12 .sharjeh :IEEE .1-5.

M. Ramamoorty, M. M. B. Narayanan, and S. Parameswaran et al., Oct. 1989. Transient performance of grounding grids, IEEE Trans. Power Del., vol. 4, no. 4, pp. 2053–2059.

P. S. Maruvada, D. H. Nguyen, and H. Hamadani-Zadeh, Apr. 1989. Studies on modeling corona attenuation of dynamic overvoltages, IEEE Trans. Power Del., vol. 4, no. 2, pp. 1441–1449.

P. S. Maruvada, H. Menemenlis, and R. Malewski, Jan. 1977. Corona characteristics of conductor bundles under impulse voltages, IEEE Trans. Power App. Syst., vol. PAS-96, no. 1, pt. 1, pp. 102–115.

R. Davis, R. W. E. Cook, and W. G. Standring, 1961. The surge corona discharge, Proc. Inst. Elect. Eng. Monographs, vol. 108, pp. 230–239.

R. Velazquez and D. Mukhedkar, 1984. Analytical modelling of grounding electrodes transient behavior, IEEE Trans. Power Apparatus and Systems, vol. 103, pp. 1314-1322.

Sunde ED. 1994, Earth conduction effects in transmission systems. Van Nostrand: New York.

T. H. Thang, Y. Baba, N. Nagaoka, A. Ametani, J. Takami, S. Okabe, and V. A. Rakov, Jun. 2012. A simplified model of corona discharge on an overhead wire for FDTD computations, IEEE Trans. Electromagn. Compat., vol. 54, no. 3, pp. 585–593.

T. H. Thang, Y. Baba, N. Nagaoka, A. Ametani, J. Takami, S. Okabe, and V. A. Rakov, Dec. 2012. FDTD simulation of lightning surges on overhead wires in the presence of corona discharge, IEEE Trans. Electromagn. Compat., vol. 54, no. 6, pp. 1234–1243.

T. Narita and S. Okabe, 2002. Propagation characteristics of lightning surge with corona discharge on UHV designed transmission line, (in Japanese) Trans. Inst. Elec. Eng. Jpn., vol. 122-B, no. 2, pp. 307–313.

T. Noda, T Ono, H. Matsubara, H. Motoyama, S. Sekioka, and A. Ametani, Jan. 2003. Charge-voltage curves of surge corona on transmission lines two measurement methods, IEEE Trans. Power Del., vol. 18, no. 1, pp. 307–314.

V. Cooray and N. Theethayi, Jul. 2008. Pulse propagation along transmission lines in the presence of corona and their implication to lightning return strokes, IEEE Trans. Antennas Propag., vol. 56, no. 7, pp. 1948–1959.

W. B. Zhang, J. L. He, and Y. M. Gao, 2002. Overvoltage protection and insulation coordination, pp. 11-17, Beijing: Tsinghua University Press.

X. R. Li, O. P.Malik, and Z. Zhao, Apr. 1989. A practical mathematical model of corona for calculation of transients on transmission lines, IEEE Trans. Power Del., vol. 4, no. 2, pp. 1145–1152.